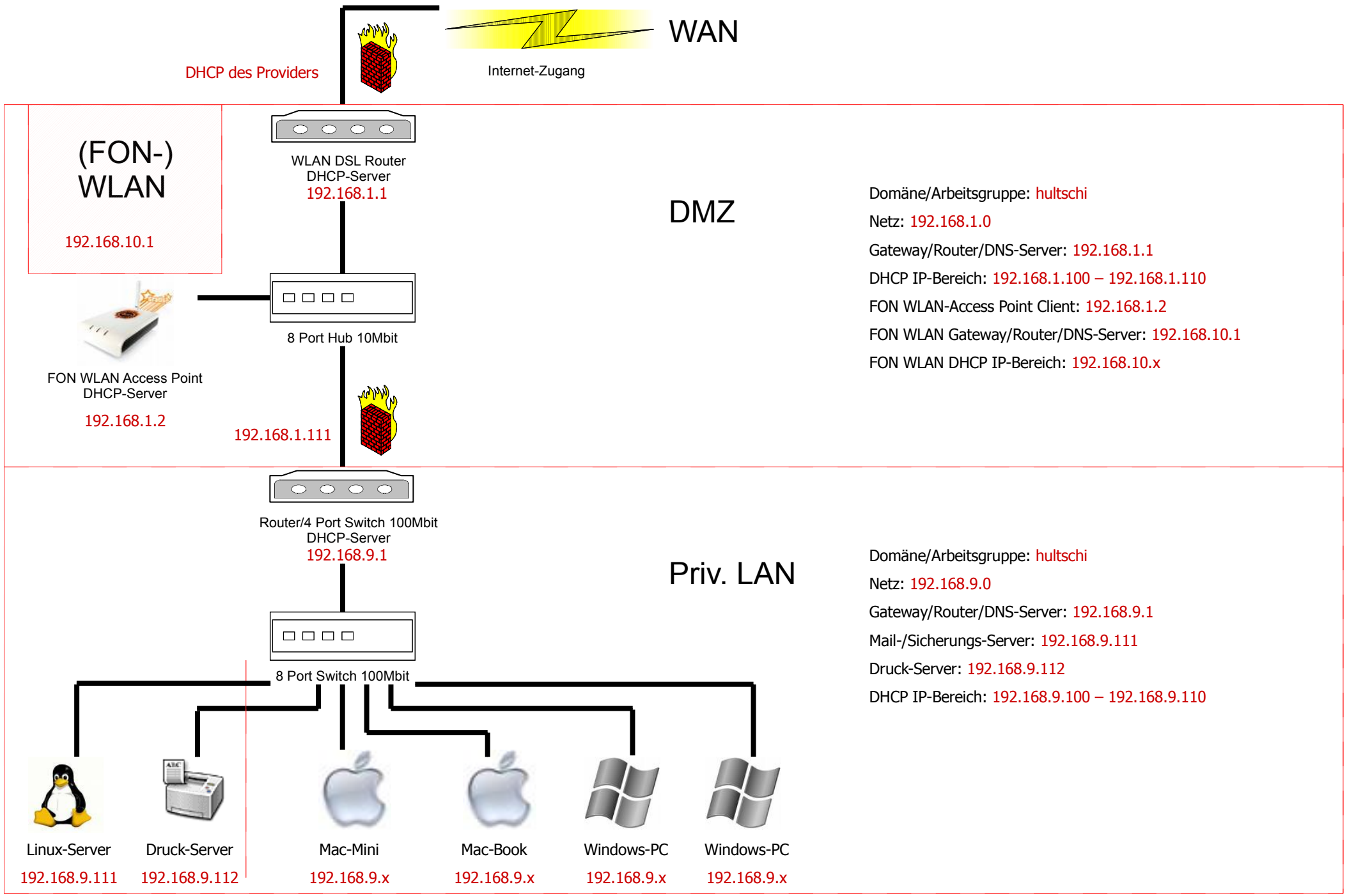

by Station 9.111